NZ TRANSPORT AGENCY
WAKA KOTAHI

Request to remove border damage flag – light vehicles

Details

Certifier name: _____ Contact phone: _____

TSD agent: _____ Site ID: _____

Vehicle make: _____ Model: _____

Border inspection date: _____

Manufacturer VIN/chassis No.																	

Note: Use only manufacturer's VIN/chassis No., not the NZTA generated 7A8 or 7AT VIN

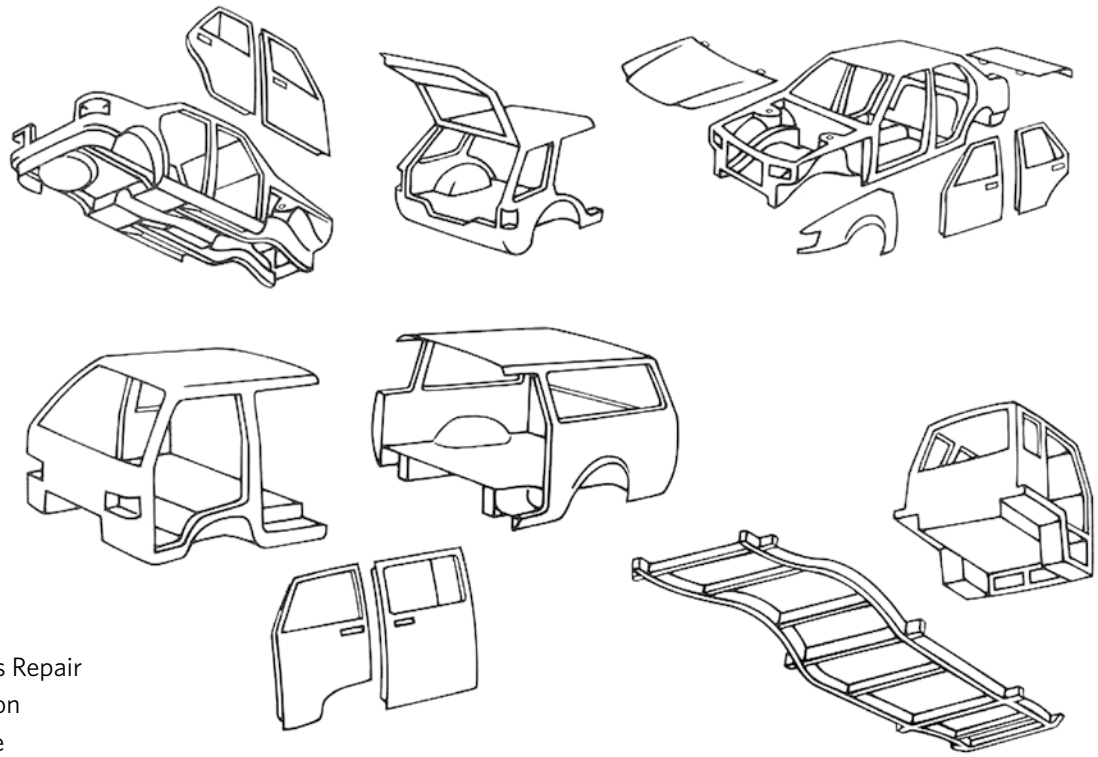

Key:

- ▨ Previous Repair
- X Corrosion
- ⬭ Damage

State clearly why the vehicle does not require repair prior to certification. You must clearly reference and use similar wording to that used in the *VIRM: Entry certification:* Inspection and certification: 3-4 Vehicle structure –Threshold for requiring repair certification.

_____

_____

_____

_____

☐ I, the undersigned, being a NZ Transport Agency-appointed vehicle inspector for entry-level certification of used and parallel-imported vehicles, have examined the above vehicle in a damaged condition prior to repair. The damage to the vehicle is cosmetic and I am satisfied that there is no damage (visible without trim removal) that would require repair certification.

☐ Vehicle has been repaired in accordance with the requirements of the *VIRM: Light vehicle repair certification* and the border damage flag can be removed as requested by the repair certifier.

LT308 #: _____ Repair certifier ID: _____

Certifier ID: _____ Signature: _____ Date: _____